Sampling / Dispensing Booth

Creating a Completely Sterile Environment

LuxMed®
Healthcare Redefined
A Brand of
LUXLIGHTING TECHNOLOGY PRIVATE LIMITED

Sampling / Dispensing Booth (LM-SDB Series)

https://youtu.be/KF4wueEBtEE?si=0fQGYqGHJLxQK4on

www.luxmed.in

M: +91 8130383561, 9350831213 | E: cto@luxmed.in

SCAN & SEND MESSAGE : WhatsApp

SCAN & FOLLOW US ON : LinkedIn twitter Website YouTube

Proprietary Designs Disclaimer – LuxMed® all product and engineering solutions are proprietary designs for software, control, operational process, colour, electronics design, shelves arrangement physical constructions and form factor.

Sampling / Dispensing Booth

Creating a Completely Sterile Environment

LuxMed® Healthcare Redefined
A Brand of LUXLIGHTING TECHNOLOGY PRIVATE LIMITED

LuxMed® Sampling & Dispensing Booth is an advanced powder containment and cleanroom enclosure designed for pharmaceutical, chemical, biotechnology, nutraceutical, and food processing industries. The booth provides a localized ISO Class 5 / Class 100 clean environment for safe sampling, weighing, and dispensing of raw materials while protecting operators, products, and the surrounding environment from contamination. The system utilizes Reverse Laminar Air Flow (RLF) technology combined with a negative-pressure containment system to effectively capture airborne dust and prevent cross-contamination.

Key Features

- ISO Class 5 / Class 100 Clean Environment
- Reverse Laminar Downflow Air System
- Multi-Stage Filtration with HEPA/ULPA Filters
- Negative Pressure Containment Technology
- SS 304 / SS 316 GMP Compliant Construction
- Low Noise Operation (<65 dB)
- Digital Control Panel with Monitoring System
- Integrated Utility Sockets for Weighing Equipment
- UV Sterilization Lamp (Optional)
- Energy Efficient Design
- Easy Cleaning with Rounded Internal Corners

Technical Specifications

Parameter	Specification
Model	LM-SDB Series
Cleanliness Class	ISO 5 / Class 100
Construction Material	SS 304 / SS 316
Air Flow Type	Reverse Laminar Downflow
Filtration System	Pre Filter + Fine Filter + HEPA Filter
HEPA Efficiency	99.99% @ 0.3 Micron
Lighting Intensity	≥ 500 Lux
Noise Level	< 65 dB
Electrical Supply	230V AC, 50Hz
Utility Socket	16A Integrated Socket
Control System	Digital LCD Controller
UV Lamp	Optional
Exhaust Air	10%–30%
Compliance	GMP, ISO Standards

M: +91 8130383561, 9350831213 | E: cto@luxmed.in

SCAN & SEND MESSAGE : WhatsApp
SCAN & FOLLOW US ON : LinkedIn twitter Website YouTube

Proprietary Designs Disclaimer – LuxMed® all product and engineering solutions are proprietary designs for software, control, operational process, colour, electronics design, shelves arrangement physical constructions and form factor.

Sampling / Dispensing Booth

Creating a Completely Sterile Environment

LuxMed®
Healthcare Redefined
A Brand of
LUXLIGHTING TECHNOLOGY PRIVATE LIMITED

M: +91 8130383561, 9350831213 | E: cto@luxmed.in

SCAN & SEND MESSAGE :

SCAN & FOLLOW US ON :

Proprietary Designs Disclaimer – LuxMed® all product and engineering solutions are proprietary designs for software, control, operational process, colour, electronics design, shelves arrangement physical constructions and form factor.

1.HEPA FILTER 0.3 MICRON ,EU-14 FLANGE TYPE 450X900X69 MAKE ULTRAFIL 2
2.FRESH AIR PRE FILTER EU-10% 5 MICRON 600X600X25 FLANGE TYPE MAKE ULTRAFIL 2
3.BLOWER MAKE EBM/ FANCE TECH 2
4.MICROPROCESSOR BASED LCD MAKE LUXMAD
5.FLOROCENT LIGHT MAKE PHILIPS MILKY WHITE

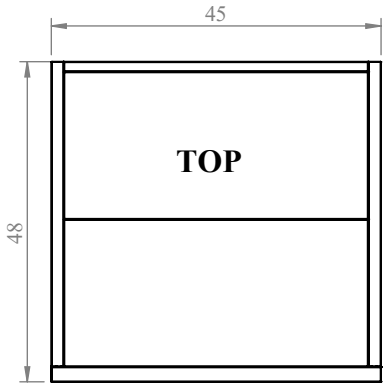

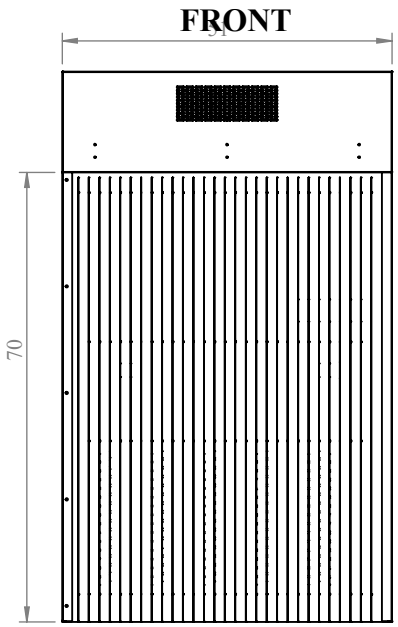

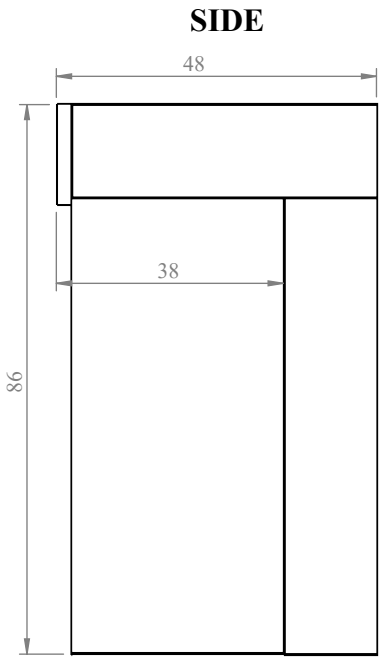

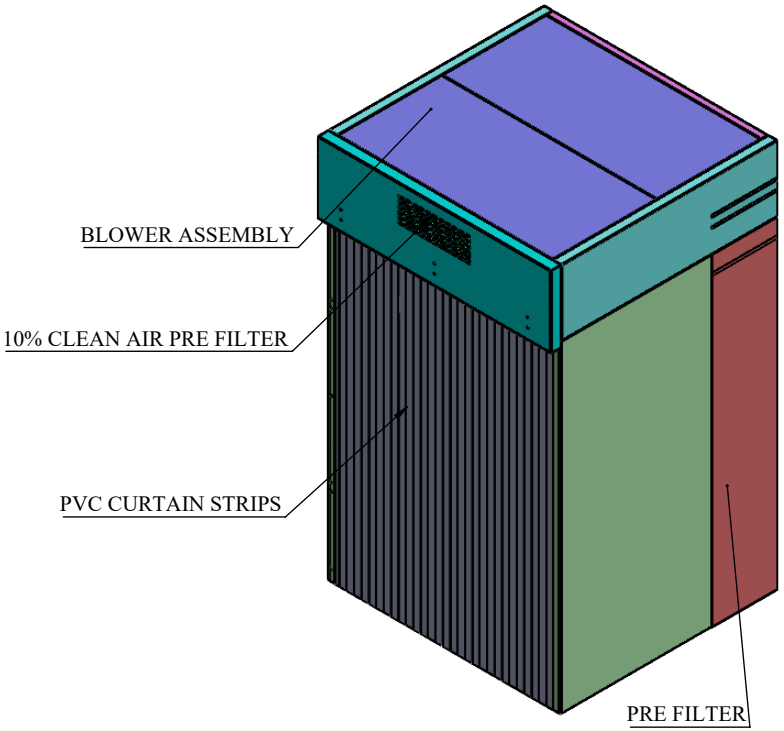

ALL DIMENTION IN INCH .

DATE	PREP	CHK'D	APPV'D
20-05-2026	BAPAN		

TITLE: SAMPLING BOOTH

MATERIAL: _____ DWG NO.- _____

FINISH: _____ PART NO.- _____

PART NAME: _____ A4 SHEET 1 OF 1